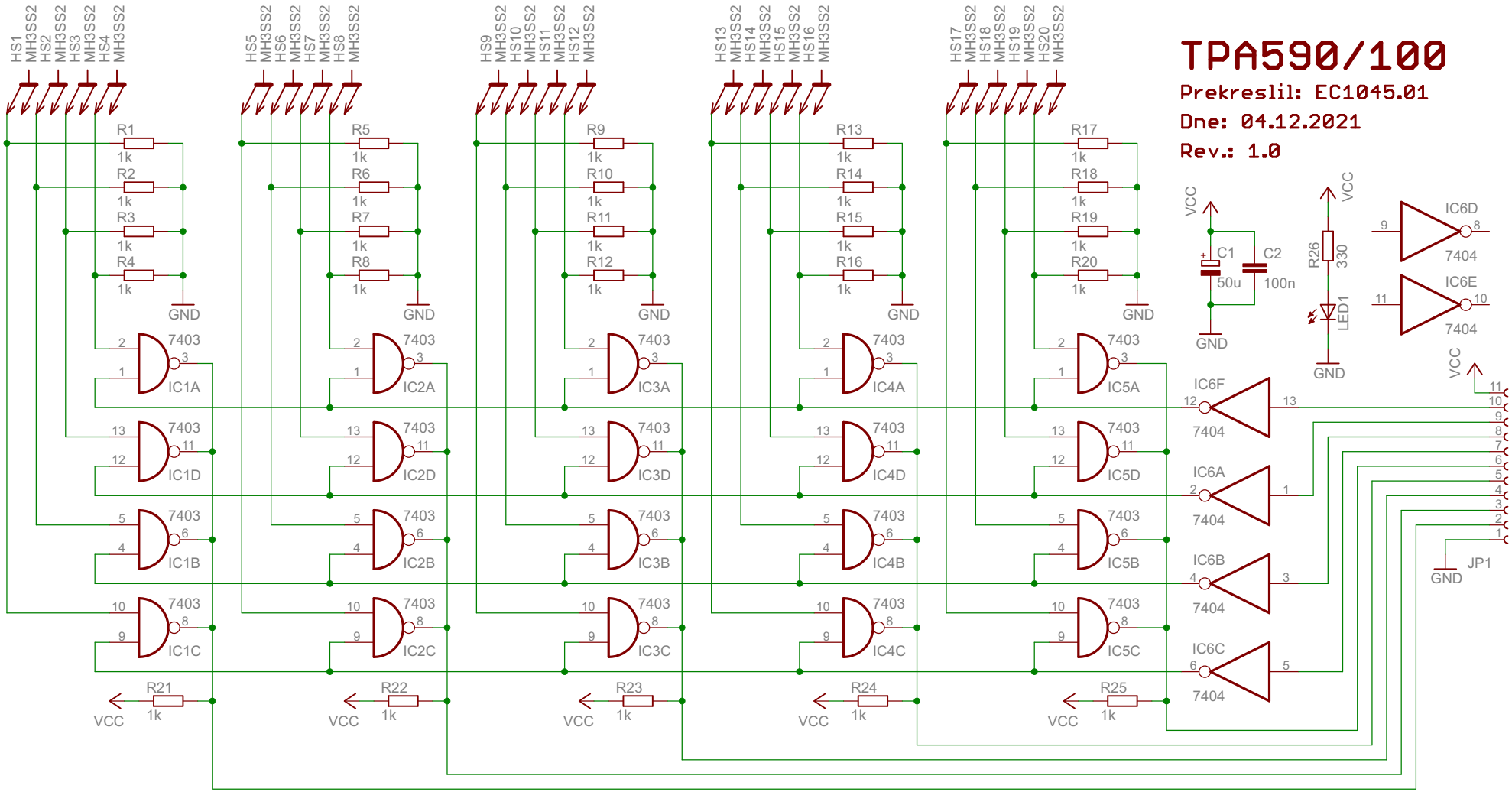
TPA590/100
Prekreslil: EC1045.01
Dne: 04.12.2021
Rev.: 1.0
HS1 MH3SS2
HS2 MH3SS2
HS3 MH3SS2
HS4 MH3SS2
HS5 MH3SS2
HS6 MH3SS2
HS7 MH3SS2
HS8 MH3SS2
HS9 MH3SS2
HS10 MH3SS2
HS11 MH3SS2
HS12 MH3SS2
HS13 MH3SS2
HS14 MH3SS2
HS15 MH3SS2
HS16 MH3SS2
HS17 MH3SS2
HS18 MH3SS2
HS19 MH3SS2
HS20 MH3SS2
R1 1k
R2 1k
R3 1k
R4 1k
R5 1k
R6 1k
R7 1k
R8 1k
R9 1k
R10 1k
R11 1k
R12 1k
R13 1k
R14 1k
R15 1k
R16 1k
R17 1k
R18 1k
R19 1k
R20 1k
R21 1k
R22 1k
R23 1k
R24 1k
R25 1k
R26 330
C1 50u
C2 100n
LED1
VCC
GND
7403
IC1A
IC1B
IC1C
IC1D
IC2A
IC2B
IC2C
IC2D
IC3A
IC3B
IC3C
IC3D
IC4A
IC4B
IC4C
IC4D
IC5A
IC5B
IC5C
IC5D
IC6A
IC6B
IC6C
IC6D
IC6E
IC6F
7404
JP1