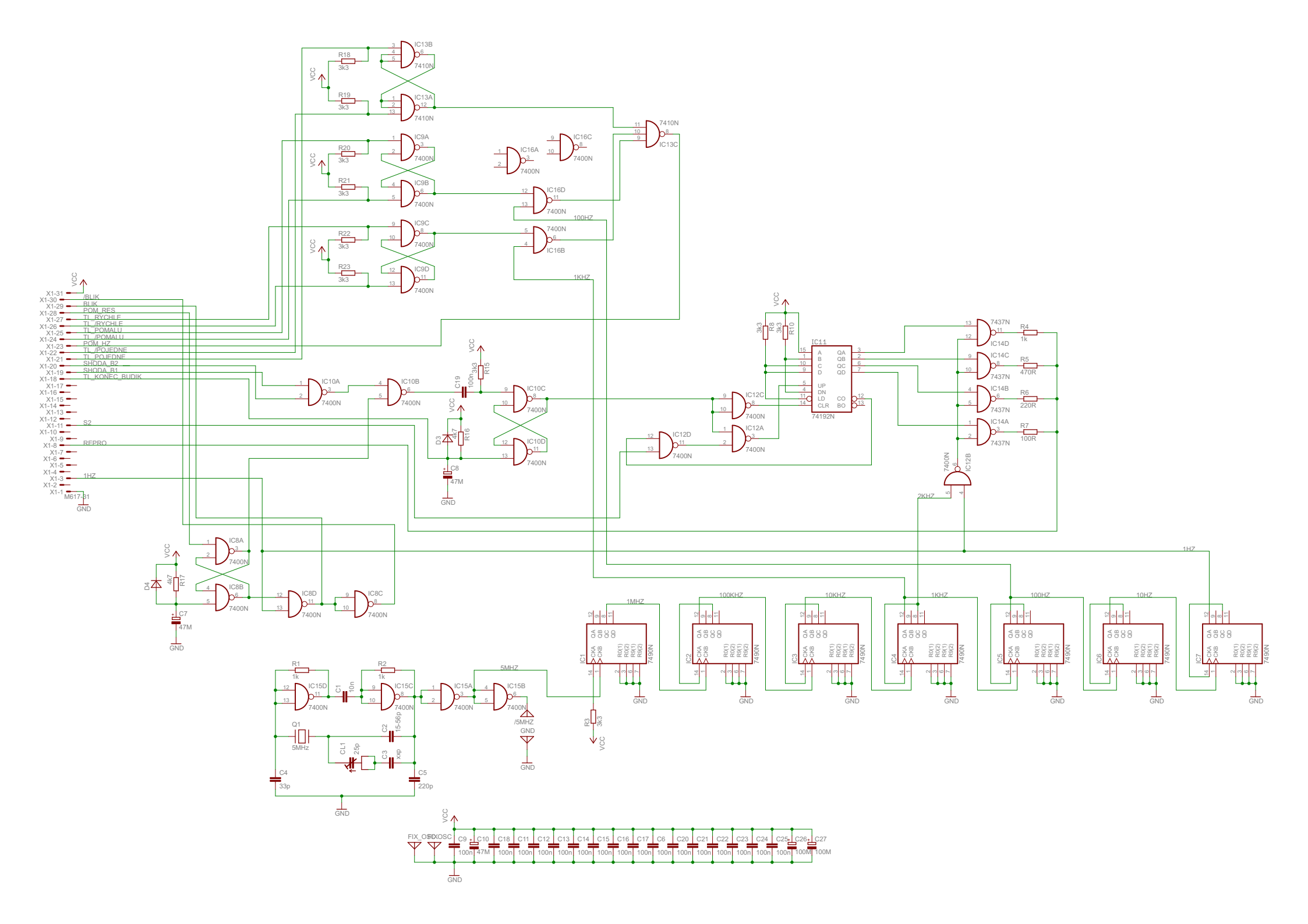
VCC
GND
X1-31
X1-30
X1-29
X1-28
X1-27
X1-26
X1-25
X1-24
X1-23
X1-22
X1-21
X1-20
X1-19
X1-18
X1-17
X1-16
X1-15
X1-14
X1-13
X1-12
X1-11
X1-10
X1-9
X1-8
X1-7
X1-6
X1-5
X1-4
X1-3
X1-2
X1-1
M617-31
/BLIK
BLIK
POM_RES
TL_RYCHLE
TL_/RYCHLE
TL_POMALU
TL_/POMALU
POM_HZ
TL_/POJEDNE
TL_POJEDNE
SHODA_B2
SHODA_B1
TL_KONEC_BUDIK
S2
REPRO
1HZ
IC13B
IC13A
IC13C
IC9A
IC9B
IC9C
IC9D
IC16A
IC16C
IC16D
IC16B
IC10A
IC10B
IC10C
IC10D
IC12C
IC12A
IC12D
IC11
74192N
IC14D
IC14C
IC14B
IC14A
IC12B
IC8A
IC8B
IC8D
IC8C
IC15D
IC15C
IC15A
IC15B
IC1
IC2
IC3
IC4
IC5
IC6
IC7
7490N
1MHZ
100KHZ
10KHZ
1KHZ
100HZ
10HZ
5MHZ
/5MHZ
100HZ
1KHZ
2KHZ
1HZ
Q1
5MHz
CL1
25p
FIX_OSC
FIX_OSC