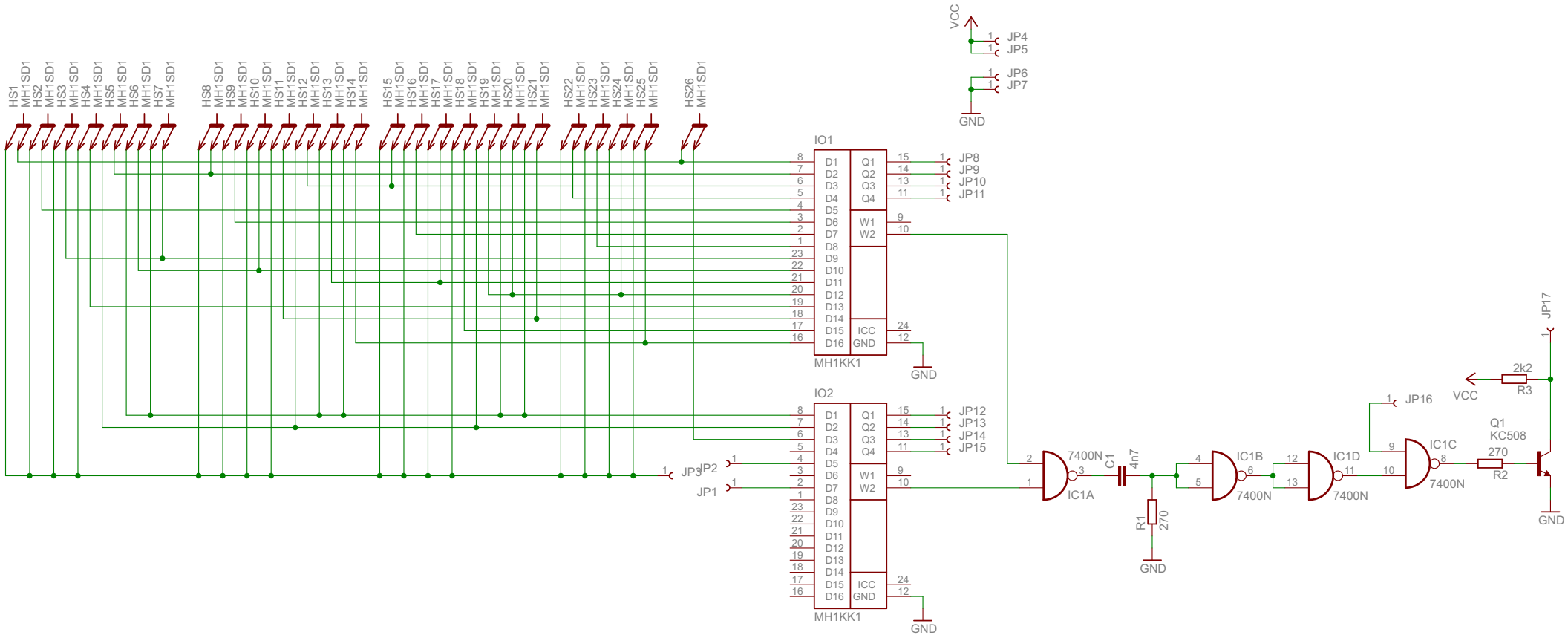
HS1 MH1SD1
HS2 MH1SD1
HS3 MH1SD1
HS4 MH1SD1
HS5 MH1SD1
HS6 MH1SD1
HS7 MH1SD1
HS8 MH1SD1
HS9 MH1SD1
HS10 MH1SD1
HS11 MH1SD1
HS12 MH1SD1
HS13 MH1SD1
HS14 MH1SD1
HS15 MH1SD1
HS16 MH1SD1
HS17 MH1SD1
HS18 MH1SD1
HS19 MH1SD1
HS20 MH1SD1
HS21 MH1SD1
HS22 MH1SD1
HS23 MH1SD1
HS24 MH1SD1
HS25 MH1SD1
HS26 MH1SD1
VCC
JP4
JP5
JP6
JP7
GND
IO1
MH1KK1
JP8
JP9
JP10
JP11
IO2
MH1KK1
JP12
JP13
JP14
JP15
JP3
JP2
JP1
7400N
IC1A
C1
4n7
R1
270
IC1B
IC1D
IC1C
JP16
JP17
2k2
R3
Q1
KC508
270
R2