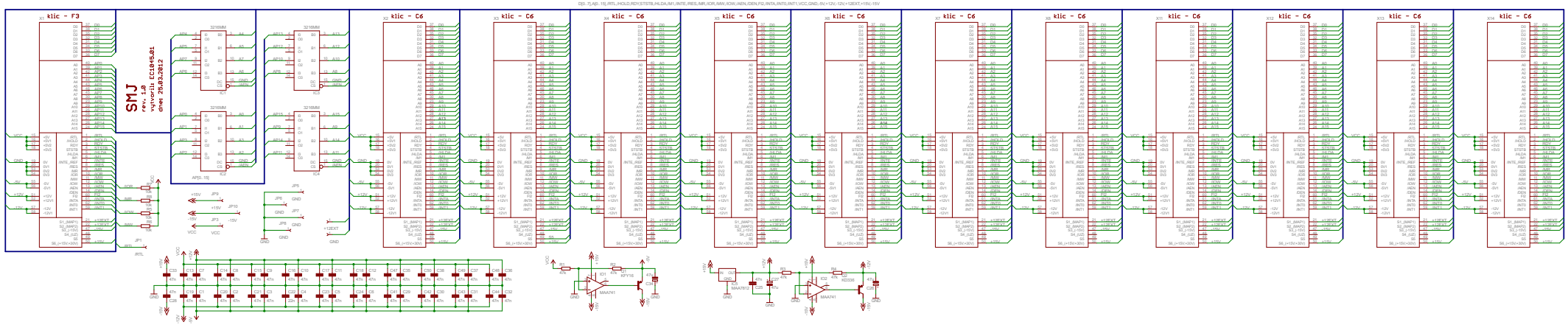
D[0..7],A[0..15],/RTL,/HOLD,/RD*,/STSTB,/HLDA,/M1,/INTE,/RES,/MR,/IOR,/MW,/IOW,/AEN,/DEN,F2,/INTA,/INTG,/INT1,VCC,GND,-5V,+12V,-12V,+12EXT,+15V,-15V
X1 klic - F3
X2 klic - C6
X3 klic - C6
X4 klic - C6
X5 klic - C6
X6 klic - C6
X7 klic - C6
X8 klic - C6
X11 klic - C6
X12 klic - C6
X13 klic - C6
X14 klic - C6
SMJ
verze pcb EC1945.01
dne: 25.03.2012
IC1
IC2
IC3
IC4
JP1
JP2
JP3
JP5
JP6
JP7
JP8
JP9
JP10
IC1
MAA741
IC2
MAA741
IC3
MAA2512
IC4
MD336