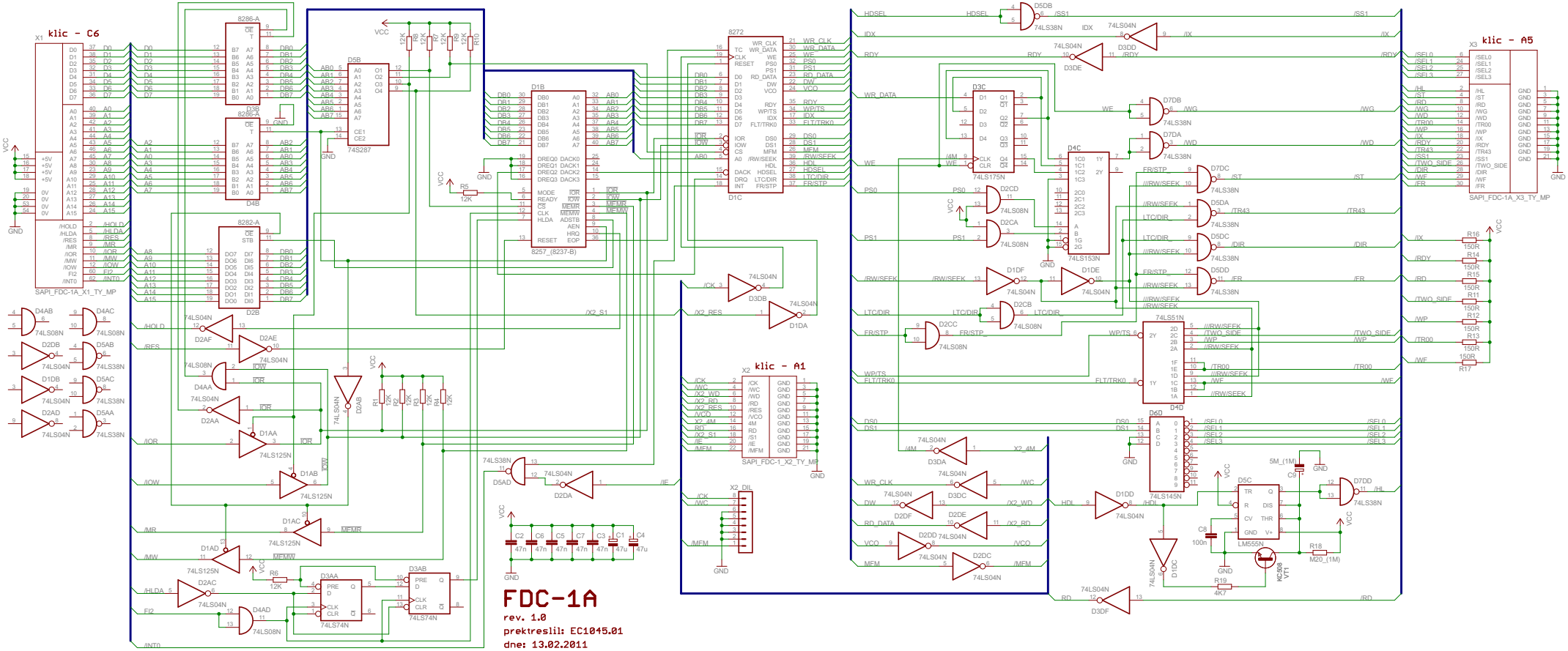
klic - C6
X1
SAPI_FDC-1A_X1_TY_MP
8286-A
D3B
D4B
D2B
D5B
74S287
D1B
8257_(8237-B)
8272
D1C
klic - A1
X2
SAPI_FDC-1_X2_TY_MP
X2_DIL
klic - A5
X3
SAPI_FDC-1A_X3_TY_MP
D3C
74LS175N
D4C
74LS153N
74LS51N
D4D
D6D
74LS145N
D5C
LM555N
VT1
KC508
FDC-1A
rev. 1.0
prektreslil: EC1045.01
dne: 13.02.2011