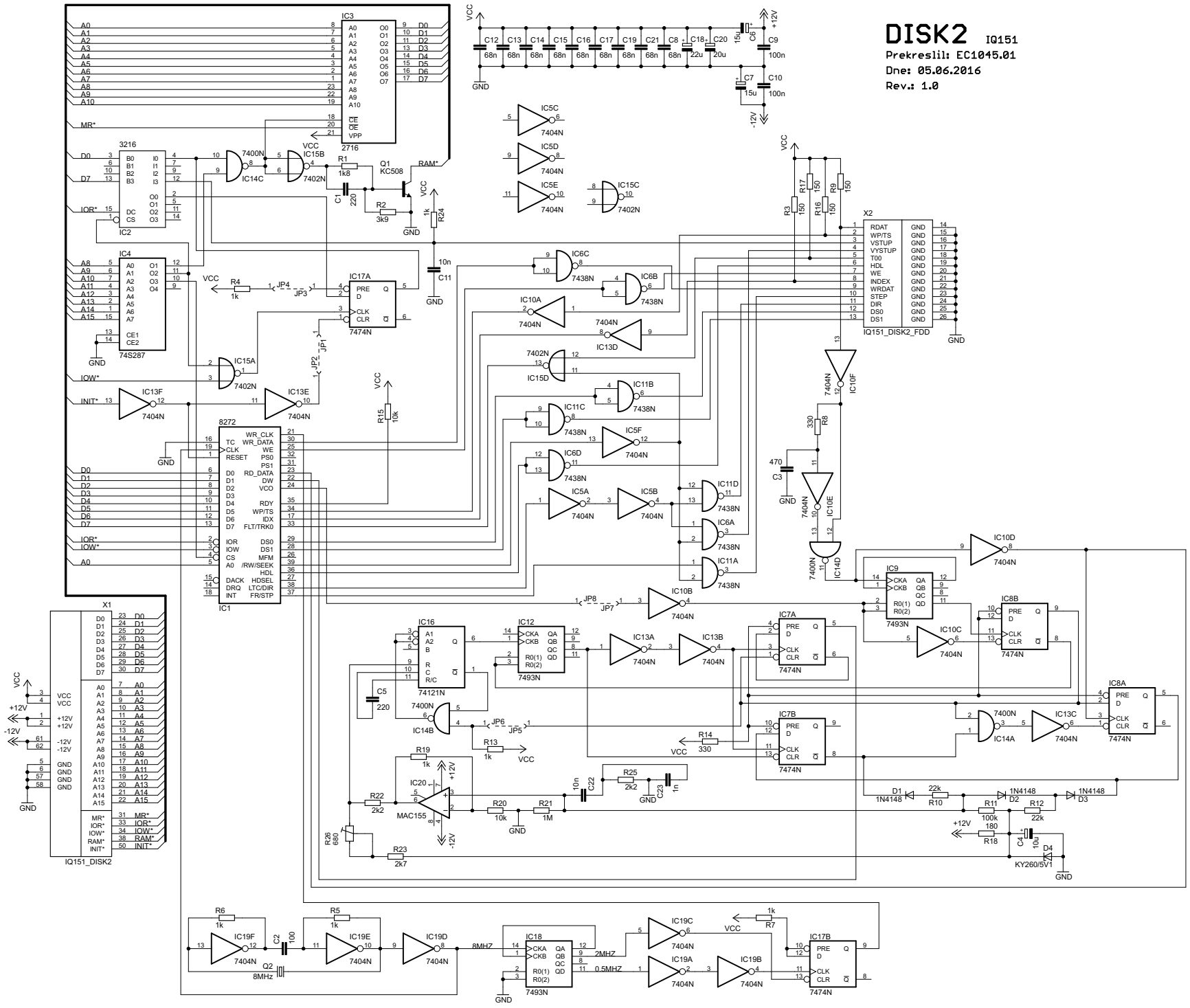
DISK2 IQ151
Prekreslil: EC1045.01
Dne: 05.06.2016
Rev.: 1.0
IC3 2716
IC2 3216
IC4 74S287
IC1 8272
IC17A 7474N
IC15B 7402N
IC14C 7400N
IC5C 7404N
IC5D 7404N
IC5E 7404N
IC15C 7402N
IC6C 7438N
IC6B 7438N
IC10A 7404N
IC13D 7404N
IC15D 7402N
IC11B 7438N
IC11C 7438N
IC5F 7404N
IC6D 7438N
IC5A 7404N
IC5B 7404N
IC11D 7438N
IC6A 7438N
IC11A 7438N
IC10B 7404N
IC13F 7404N
IC13E 7404N
IC15A 7402N
IC10F 7404N
IC10E 7404N
IC14D 7400N
IC10D 7404N
IC9 7493N
IC8B 7474N
IC10C 7404N
IC8A 7474N
IC7A 7474N
IC7B 7474N
IC14A 7400N
IC13C 7404N
IC16 74121N
IC12 7493N
IC13A 7404N
IC13B 7404N
IC14B 7400N
IC20 MAC155
IC19F 7404N
IC19E 7404N
IC19D 7404N
IC18 7493N
IC19C 7404N
IC19A 7404N
IC19B 7404N
IC17B 7474N
X1 IQ151_DISK2
X2 IQ151_DISK2_FDD
RDAT
WP/TS
VSTUP
VYSTUP
T00
HDL
WE
INDEX
WRDAT
STEP
DIR
DS0
DS1
MR*
IOR*
IOW*
INIT*
RAM*
A0
D0
D7
VCC
GND
+12V
-12V
8MHz
2MHZ
0.5MHZ
KY260/5V1