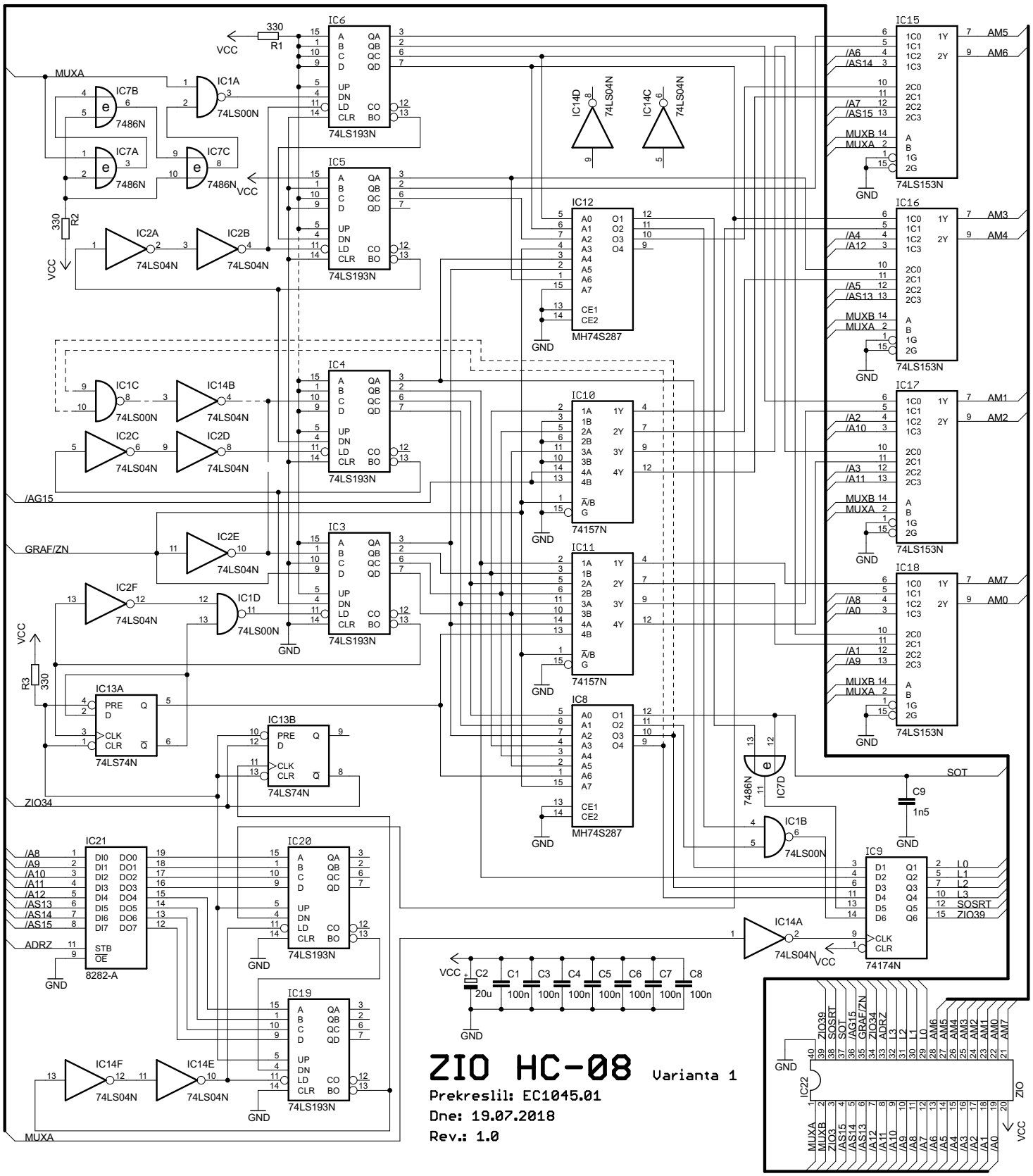
ZIO HC-08
Varianta 1
Prekreslil: EC1045.01
Dne: 19.07.2018
Rev.: 1.0
IC6
IC5
IC4
IC3
74LS193N
IC15
IC16
IC17
IC18
74LS153N
IC12
MH74S287
IC10
IC11
74157N
IC8
IC7B
IC7A
IC7C
IC7D
7486N
IC1A
IC1B
IC1C
IC1D
74LS00N
IC2A
IC2B
IC2C
IC2D
IC2E
IC2F
IC14A
IC14B
IC14C
IC14D
IC14E
IC14F
74LS04N
IC13A
IC13B
74LS74N
IC21
8282-A
IC20
IC19
IC9
74174N
IC22
MUXA
MUXB
GRAF/ZN
/AG15
ZIO34
ADRZ
SOT
SOSRT
ZIO39
VCC
GND
R1
R2
R3
330
C1
C2
C3
C4
C5
C6
C7
C8
C9
20u
100n
1n5