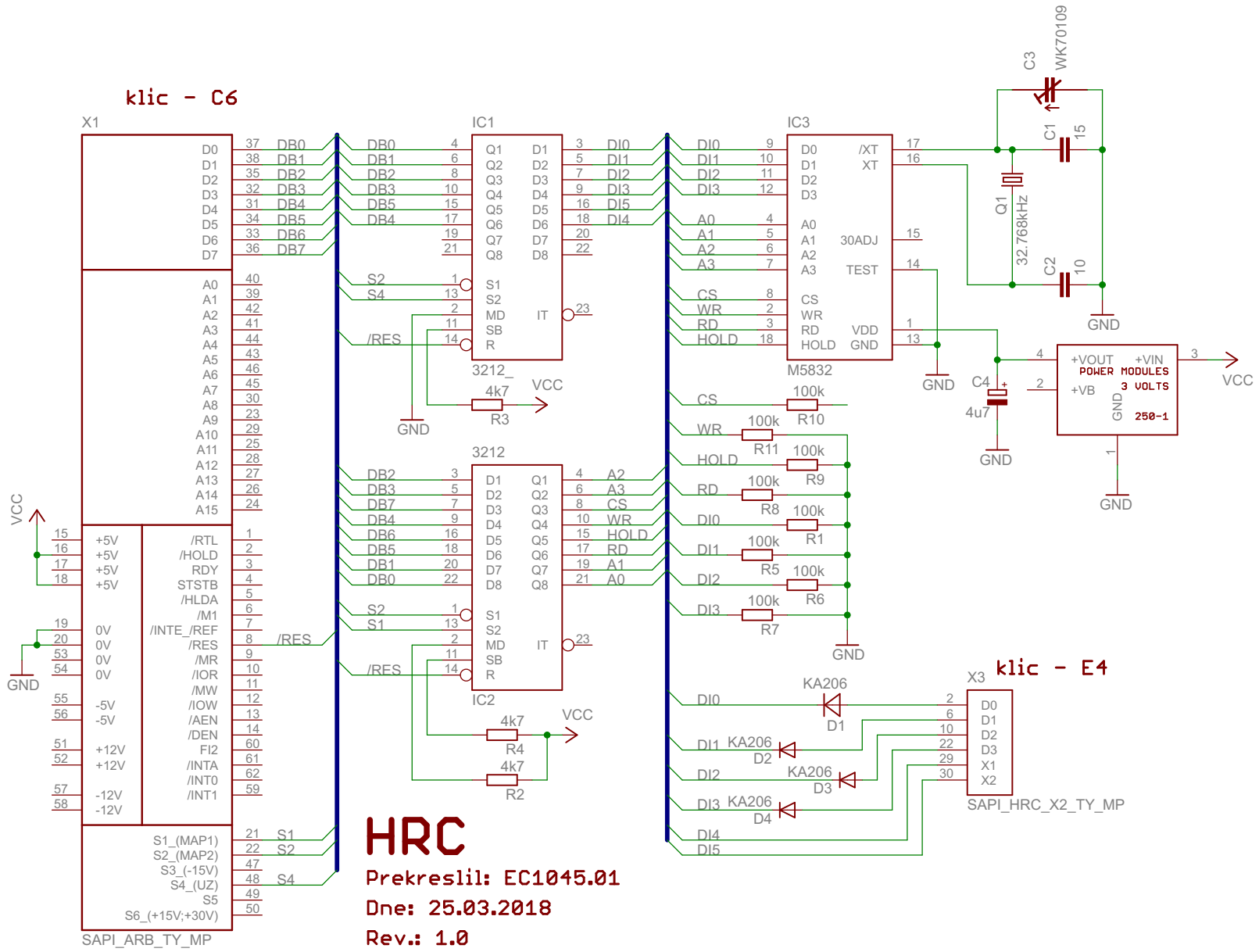
klic - C6
X1
SAPI_ARB_TY_MP
IC1
3212_
IC2
3212
IC3
M5832
C3
WK70109
C1
15
C2
10
Q1
32.768kHz
C4
4u7
POWER MODULES
3 VOLTS
250-1
+VOUT
+VIN
+VB
GND
VCC
R3
4k7
R4
4k7
R2
4k7
R10
100k
R11
100k
R9
100k
R8
100k
R1
100k
R5
100k
R6
100k
R7
100k
D1
KA206
D2
KA206
D3
KA206
D4
KA206
X3
klic - E4
SAPI_HRC_X2_TY_MP
HRC
Prekreslil: EC1045.01
Dne: 25.03.2018
Rev.: 1.0