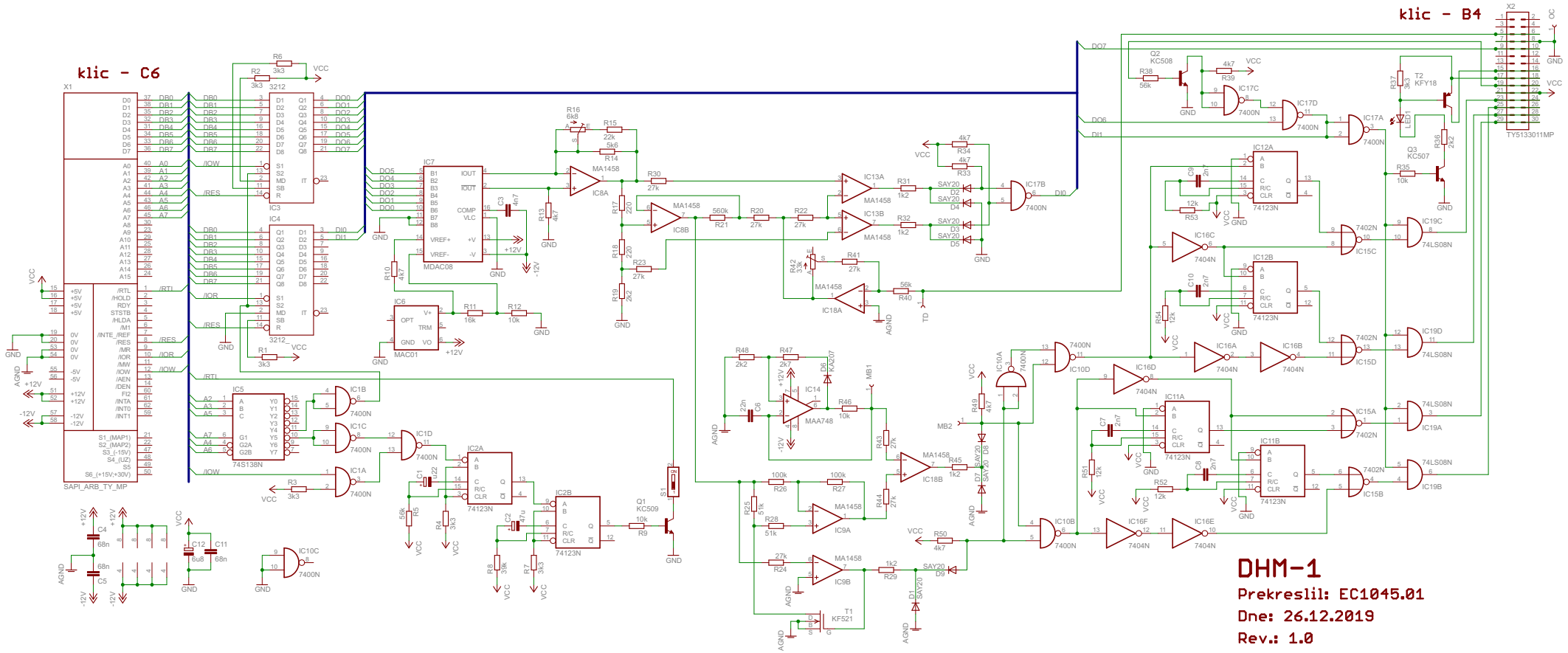
klic - C6
klic - B4
X1
SAPI_ARB_TY_MP
X2
TY5133011MP
IC3
IC4
3212
IC7
MDAC08
IC6
MAC01
IC5
74S138N
IC8A
IC8B
IC9A
IC9B
IC13A
IC13B
IC18A
IC18B
IC14
MAA748
IC2A
IC2B
74123N
IC12A
IC12B
IC11A
IC11B
IC15A
IC15B
IC15C
IC15D
IC19A
IC19B
IC19C
IC19D
IC16A
IC16B
IC16C
IC16D
IC16E
IC16F
IC17A
IC17B
IC17C
IC17D
IC10A
IC10B
IC10C
IC1A
IC1B
IC1C
IC1D
Q1 KC509
Q2 KC508
Q3 KC507
T1 KF521
T2 KFY18
S1
DHM-1
Prekreslil: EC1045.01
Dne: 26.12.2019
Rev.: 1.0