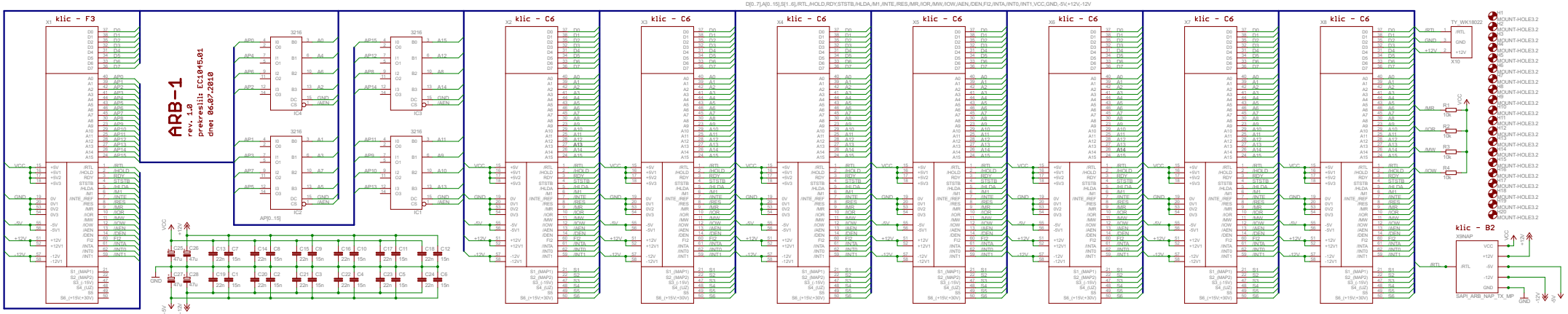
D[0..7],A[0..15],S[1..6],/RTL,/HOLD,RDY,STSTB,/HLDA,/M1,/INTE,/RES,/MR,/IOR,/MW,/IOW,/AEN,/DEN,F/2,/INTA,/INT0,/INT1,VCC,GND,-5V,+12V,-12V
klic - F3
ARB-1
rev. 1.0
prekresili: EC1045.01
dne: 06.07.2010
klic - C6
klic - B2
X9NAP
SAPI_ARB_NAP_TX_MP
TY_WK18022
X10
MOUNT-HOLE3.2