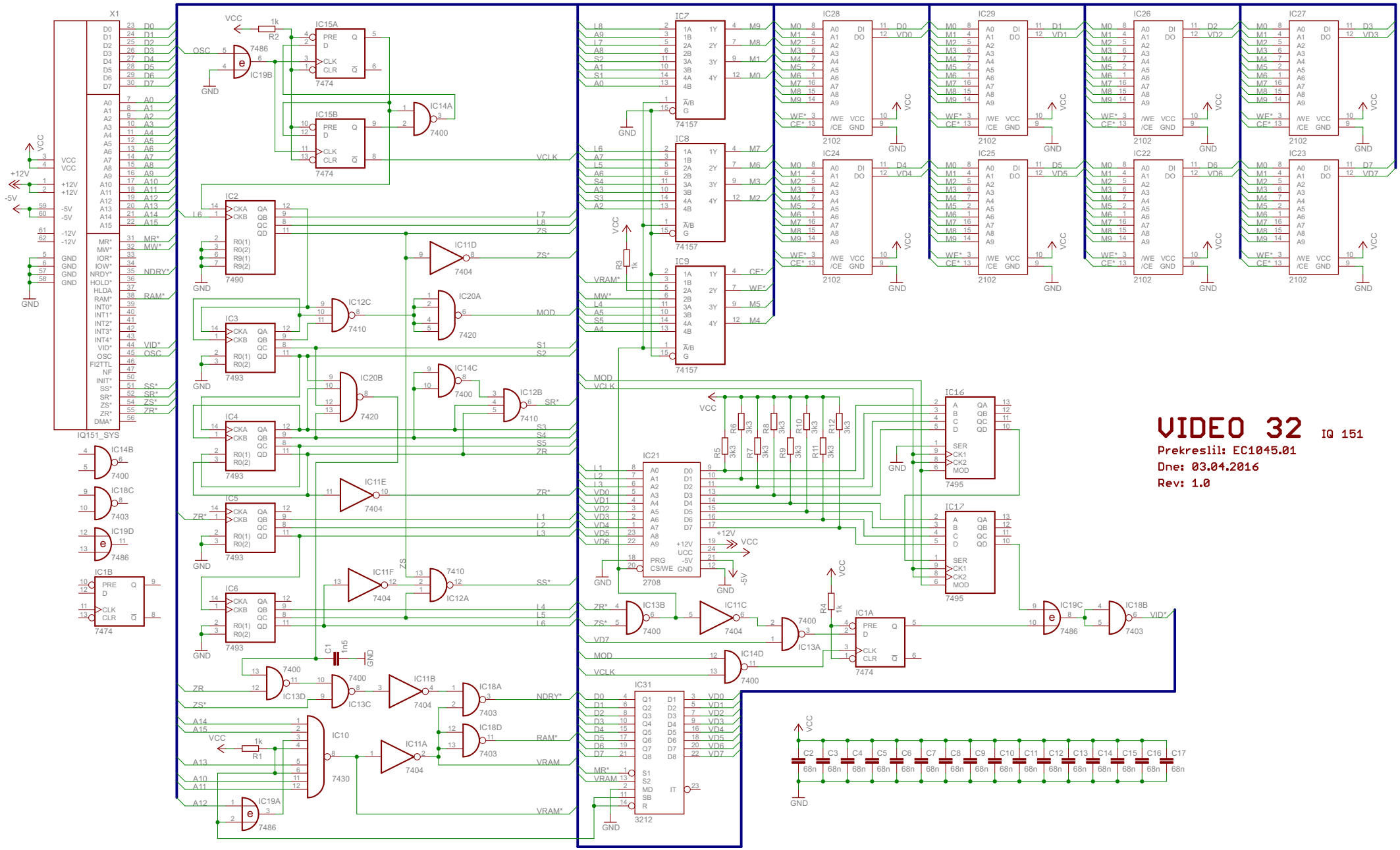
VIDEO 32
IQ 151
Prekreslil: EC1045.01
Dne: 03.04.2016
Rev: 1.0
X1
IQ151_SYS
IC1B
IC2
IC3
IC4
IC5
IC6
IC7
IC8
IC9
IC10
IC11A
IC11B
IC11C
IC11D
IC11E
IC11F
IC12A
IC12B
IC12C
IC13A
IC13B
IC13C
IC13D
IC14A
IC14B
IC14C
IC14D
IC15A
IC15B
IC16
IC17
IC18A
IC18B
IC18C
IC18D
IC19A
IC19B
IC19C
IC19D
IC20A
IC20B
IC21
IC22
IC23
IC24
IC25
IC26
IC27
IC28
IC29
IC31
VCC
GND
+12V
-5V
OSC
VCLK
VRAM*
MW*
MOD
S1
S2
S3
S4
S5
ZR
ZR*
ZS
ZS*
L1
L2
L3
L4
L5
L6
L7
L8
SS*
SR*
NDRY*
RAM*
VRAM
VID*
VD0
VD1
VD2
VD3
VD4
VD5
VD6
VD7
M0
M1
M2
M3
M4
M5
M6
M7
M8
M9
D0
D1
D2
D3
D4
D5
D6
D7
A0
A1
A2
A3
A4
A5
A6
A7
A8
A9
A10
A11
A12
A13
A14
A15
MR*
WE*
CE*
R1
R2
R3
R4
R5
R6
R7
R8
R9
R10
R11
R12
C1
C2
C3
C4
C5
C6
C7
C8
C9
C10
C11
C12
C13
C14
C15
C16
C17
7486
7474
7400
7490
7493
7404
7410
7420
7430
7403
7495
2102
74157
2708
3212