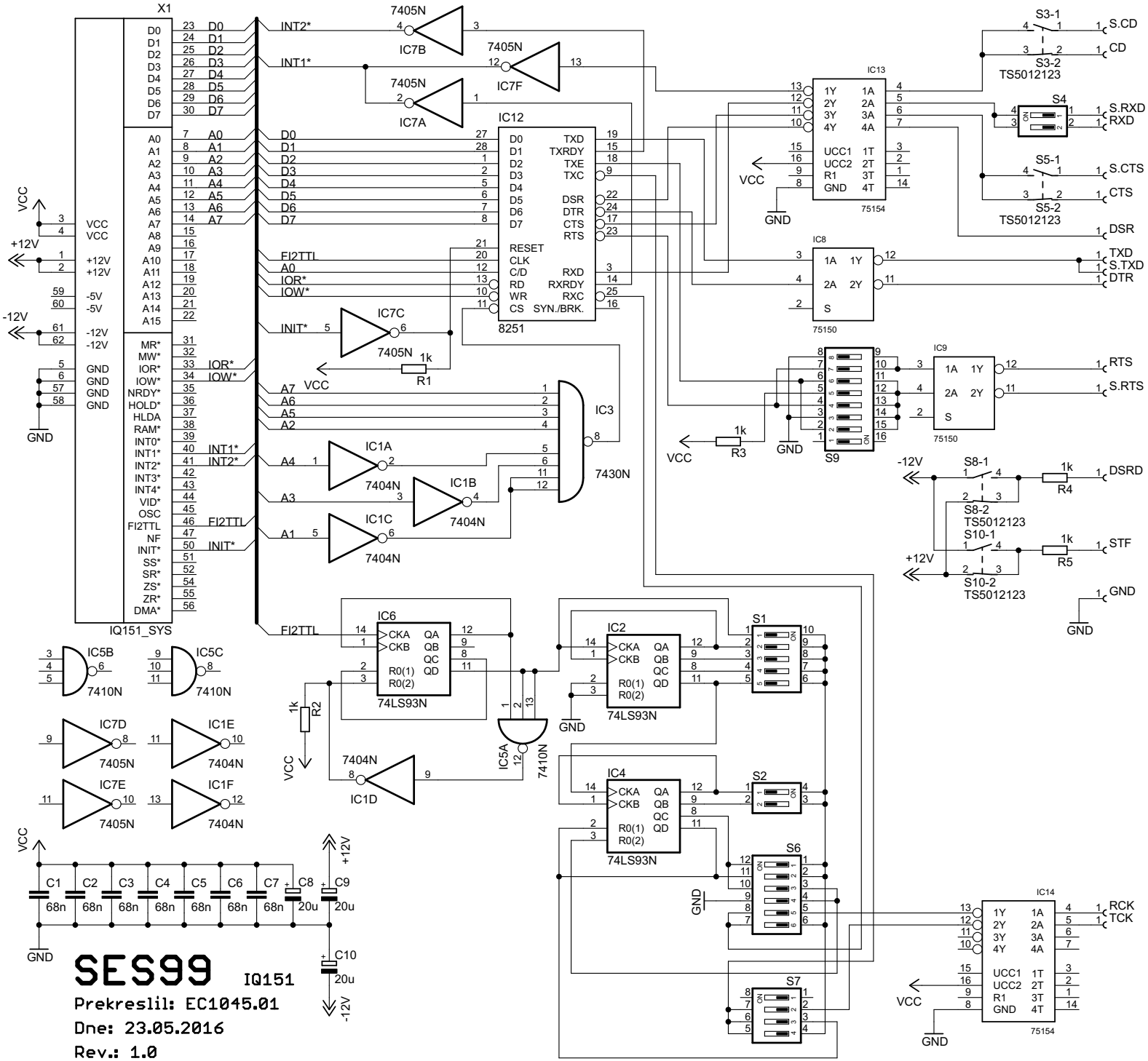
X1
IQ151_SYS
IC12
8251
IC13
75154
IC8
75150
IC9
75150
IC14
75154
IC3
7430N
IC1A
7404N
IC1B
7404N
IC1C
7404N
IC1D
7404N
IC1E
7404N
IC1F
7404N
IC7A
7405N
IC7B
7405N
IC7C
7405N
IC7D
7405N
IC7E
7405N
IC5A
7410N
IC5B
7410N
IC5C
7410N
IC6
74LS93N
IC2
74LS93N
IC4
74LS93N
S1
S2
S4
S5-1
S5-2
TS5012123
S3-1
S3-2
TS5012123
S6
S7
S9
S8-1
S8-2
TS5012123
S10-1
S10-2
TS5012123
R1
R2
R3
R4
R5
C1
C2
C3
C4
C5
C6
C7
C8
C9
C10
68n
20u
VCC
+12V
-12V
-5V
GND
S.CD
CD
S.RXD
RXD
S.CTS
CTS
DSR
TXD
S.TXD
DTR
RTS
S.RTS
DSRD
STF
RCK
TCK
SES99
IQ151
Prekreslil: EC1045.01
Dne: 23.05.2016
Rev.: 1.0