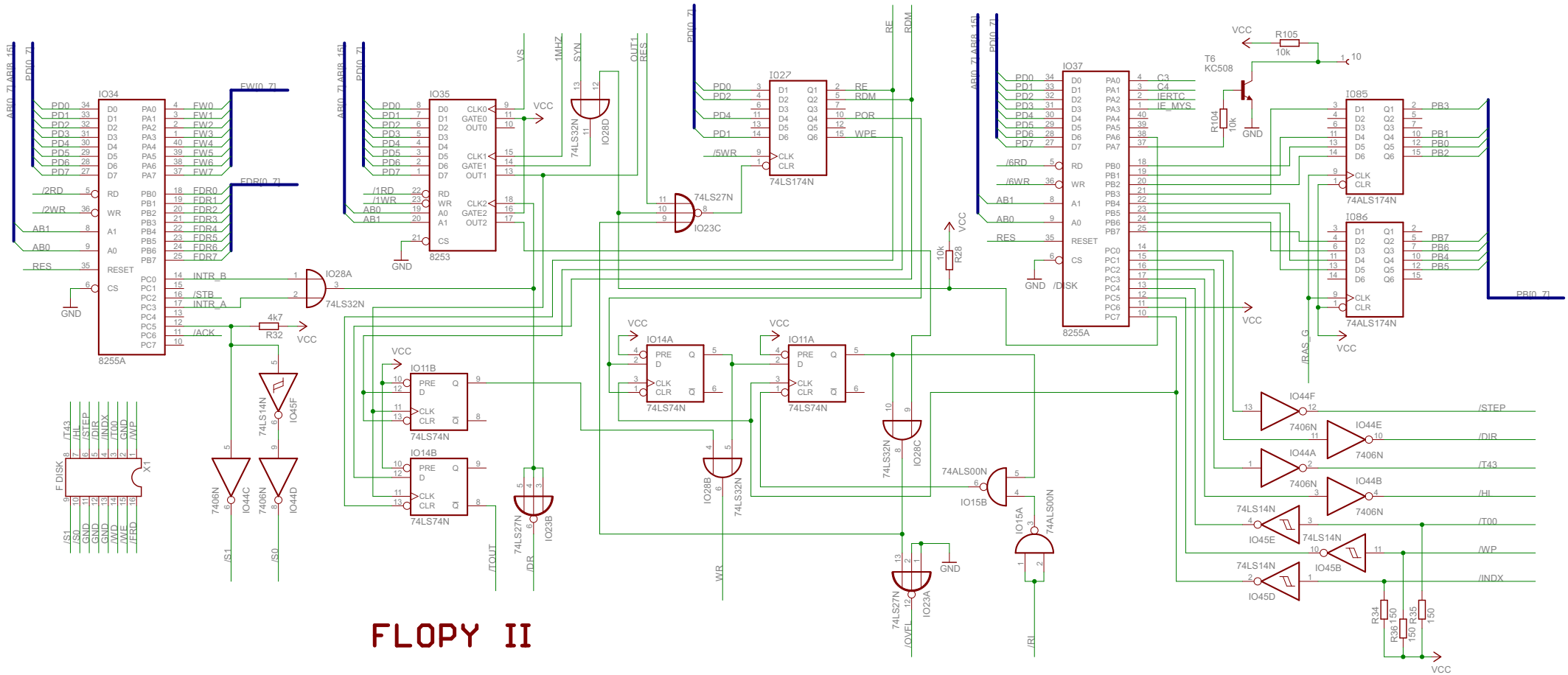
IO34
8255A
IO35
8253
IO27
74LS174N
IO37
8255A
IO85
74ALS174N
IO86
74ALS174N
IO28A
74LS32N
IO28D
74LS32N
IO23C
74LS27N
IO14A
74LS74N
IO11A
74LS74N
IO11B
74LS74N
IO14B
74LS74N
IO28B
74LS32N
IO28C
74LS32N
IO23B
74LS27N
IO23A
74LS27N
IO15B
74ALS00N
IO15A
74ALS00N
IO44F
7406N
IO44E
7406N
IO44A
7406N
IO44B
7406N
IO45E
74LS14N
IO45B
74LS14N
IO45D
74LS14N
IO45F
74LS14N
IO44C
7406N
IO44D
7406N
T6
KC508
R105
10k
R104
10k
R28
10k
R32
4k7
R34
150
R36
150
R35
150
X1
F DISK
AB[0..7],AB[8..15]
PD[0..7]
FW[0..7]
FDR[0..7]
PB[0..7]
VCC
GND
/STEP
/DIR
/T43
/HI
/T00
/WP
/INDX
/RI
/OVFL
/TOUT
/DR
/S1
/S0
/DISK
/RAS_G
WR
RE
RDM
POR
WPE
RES
/5WR
/6RD
/6WR
/2RD
/2WR
/1RD
/1WR
/STB
/ACK
INTR_A
INTR_B
VS
1MHZ
SYN
OUT1
RES

FLOPY II