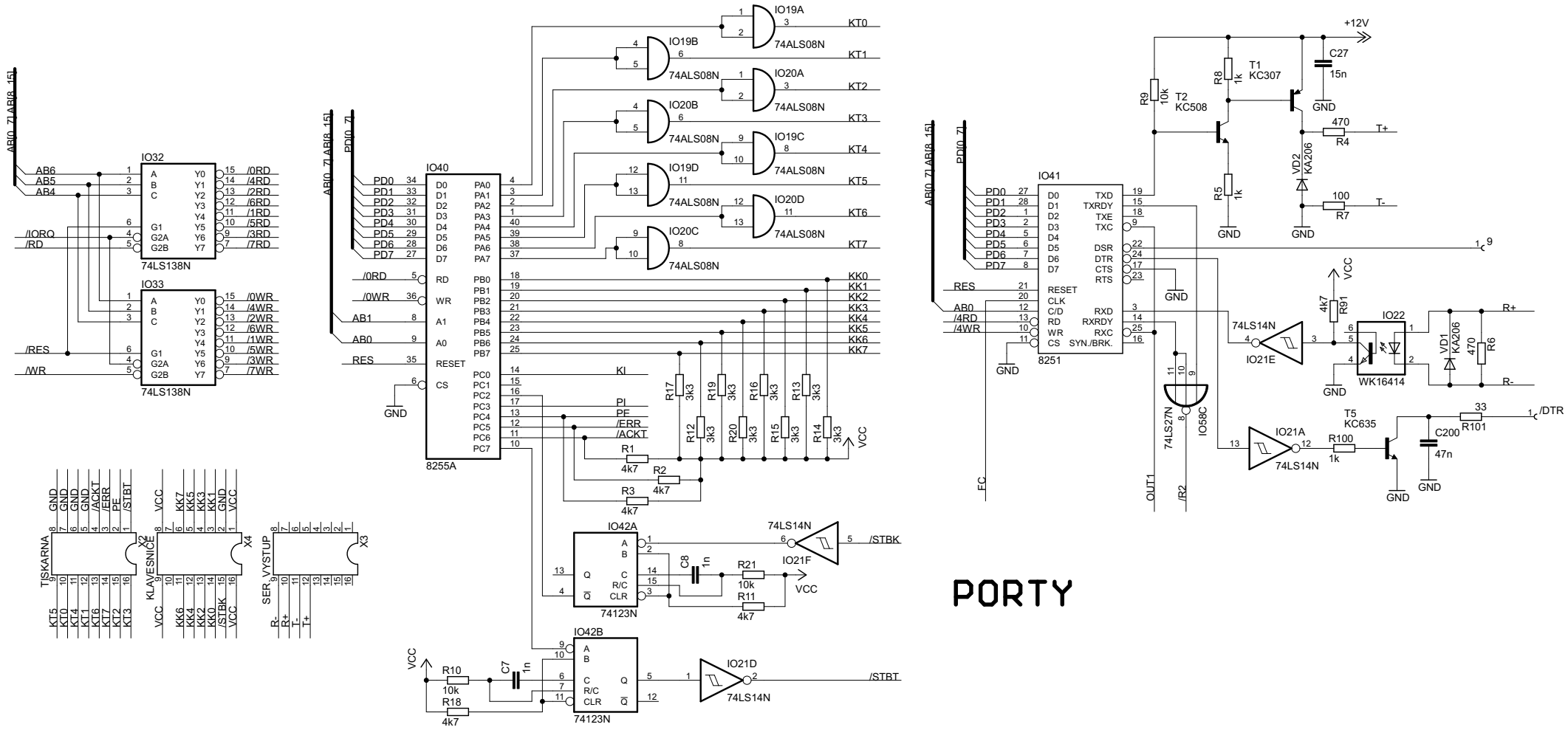
AB[0..7] AB[8..15]
IO32
74LS138N
IO33
74LS138N
/IORQ
/RD
/RES
/WR
/0RD
/4RD
/2RD
/6RD
/1RD
/5RD
/3RD
/7RD
/0WR
/4WR
/2WR
/6WR
/1WR
/5WR
/3WR
/7WR
PD[0..7]
IO40
8255A
RESET
RD
WR
CS
AB1
AB0
PA0
PA1
PA2
PA3
PA4
PA5
PA6
PA7
PB0
PB1
PB2
PB3
PB4
PB5
PB6
PB7
PC0
PC1
PC2
PC3
PC4
PC5
PC6
PC7
KT0
KT1
KT2
KT3
KT4
KT5
KT6
KT7
KK0
KK1
KK2
KK3
KK4
KK5
KK6
KK7
KI
PI
PE
/ERR
/ACKT
IO19A
IO19B
IO19C
IO19D
IO20A
IO20B
IO20C
IO20D
74ALS08N
R1 4k7
R2 4k7
R3 4k7
R12 3k3
R17 3k3
R19 3k3
R20 3k3
R16 3k3
R15 3k3
R13 3k3
R14 3k3
VCC
GND
IO42A
74123N
IO42B
74123N
C8 1n
R21 10k
R11 4k7
C7 1n
R10 10k
R18 4k7
74LS14N
IO21F
IO21D
/STBK
/STBT
TISKARNA
X2
KLAVESNICE
X4
SER. VYSTUP
X3
GND
VCC
/ACKT
/ERR
PE
/STBT
KK7
KK6
KK5
KK4
KK3
KK2
KK1
KK0
KT5
KT0
KT4
KT1
KT6
KT7
KT2
KT3
R-
R+
T-
T+
IO41
8251
RESET
CLK
C/D
RD
WR
CS
SYN./BRK.
TXD
TXRDY
TXE
TXC
DSR
DTR
CTS
RTS
RXD
RXRDY
RXC
RES
AB0
/4RD
/4WR
FC
OUT1
/R2
74LS27N
IO58C
+12V
C27 15n
R9 10k
R8 1k
T1 KC307
T2 KC508
R5 1k
470 R4
T+
VD2 KA206
100 R7
T-
4k7 R91
IO22
WK16414
VD1 KA206
470 R6
R+
R-
IO21E
IO21A
T5 KC635
R100 1k
C200 47n
33 R101
/DTR

PORTY